3 611 C37 080
Issue / Stand 13-03-26

Fig./Abb. 1

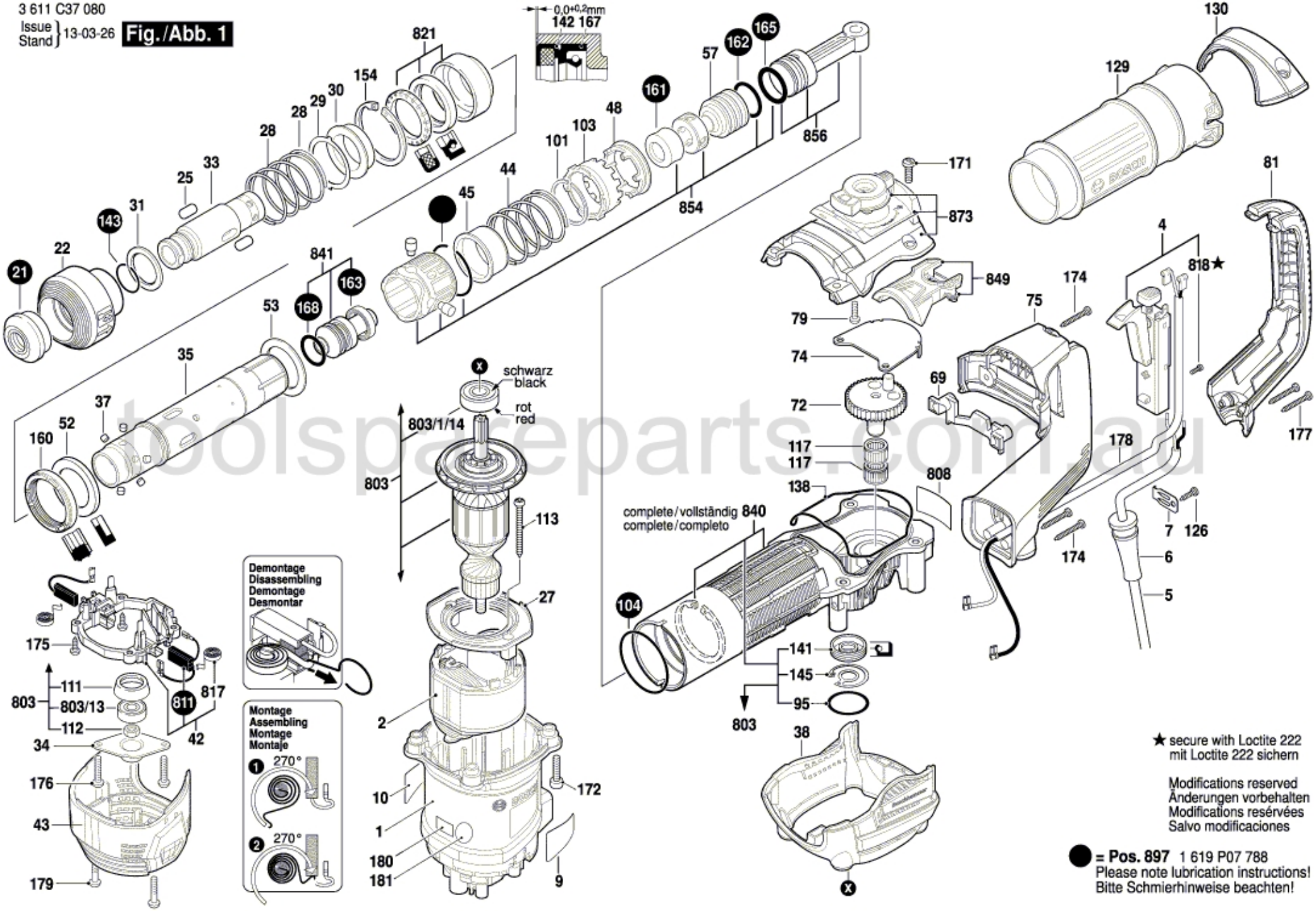

toolspareparts.com.au